Franck-Hertz Tube with Hg Filling and Heating Chamber

1006795 (230 V, 50/60 Hz)
1006794 (115 V, 50/60 Hz)

Instruction sheet

10/15 ALF

1. Safety instructions

The apparatus conforms to the safety regulations for electrical test, control and laboratory equipment as specified in DIN EN 61010 Part 1. Its protection classification is deemed to be class I. It is intended for use in dry rooms suitable for electrical equipment or installations.

Safe operation of the equipment is guaranteed, provided it is used correctly. However, there is no guarantee of safety if the equipment is used in an improper or careless manner. If it is deemed that the equipment can no longer be operated without risk (e.g. visible damage has occurred), the equipment should be switched off immediately and secured against any inadvertent use.

In schools and training institutions, operation of the apparatus is to be responsibly supervised by trained personnel.

- Before putting the equipment into operation, confirm it is compatible with the local mains voltage.
- Before setting up or starting any experiments, check the apparatus for any damage.
- In the event of any malfunction/defect or visible damage, switch off the equipment immediately and secure it against any inadvertent use.
- The instrument may only be connected to the mains via a socket that has an earth connection.
- Only trained electricians are permitted to open up the apparatus' housing.

Beware: Risk of burns! The viewing windows and the walls of the heating chamber can reach temperatures of up to 300° C during operation.

- Set up the heating chamber on a heat-resistant surface.
- When the heating chamber is in operation, do not attempt to touch or move the apparatus. Only move or transport the equipment by using the insulated handle.
- Allow the apparatus to cool before dismantling the experiment.

Beware: There is always a risk that glass can break and cause injury.

- Use all six knurled screws to affix the front plate to the heating chamber.
- Do not subject the tube to any mechanical stress. Do not put kinks in any connecting leads.

The Franck-Hertz tube contains mercury.

- If the glass breaks and mercury escapes, make sure to observe safety regulations relating to the handling of mercury.

2. Description

The Franck-Hertz tube with its mercury filling is used to demonstrate the quantised release of energy by free electrons colliding with mercury atoms and to determine that the excitation energy for the mercury resonance line ($6^1S_0 - 6^3P_1$) is 4.9 eV.

Franck-Hertz tube attached to front plate

The Franck-Hertz tube is a highly evacuated electron tube containing mercury with its electrodes set up in parallel planes. The electrodes consist of an indirectly heated oxide cathode, an anode grid and a collector electrode. In order to increase the likelihood of collisions, the distance between the anode and cathode has been made large (8 mm) in comparison to the mean free path in a mercury atmosphere (for a temperature of approx. 180°C). By contrast, the distance between anode and collector is small. An earth ring is located level with the anode grille to prevent disturbance due to background radiation. The tube is mounted on the front plate of the heating chamber and can be removed or exchanged. The front plate also has ceramic-insulated sockets and a schematic diagram of the tube. The Franck-Hertz tube is mounted in such a way that the whole tube and its connecting wires can all be maintained at constant temperature. This is necessary because the density of the mercury vapour is always determined at the coldest point of the tube. Leakage currents resulting from radiation due to ion conduction in the hot glass walls are prevented by a protective sintered alumina ring. A fixed attenuating resistor (10 k□) is inserted between the sockets for the accelerating voltage and for the anode of the tube. This protects the tube in the event of excessive voltage occurring due to arcing. The voltage drop across this resistor can be neglected when measurements are being made.

Heating chamber

The heating chamber serves to establish the vapour pressure inside the Franck-Hertz tube with its mercury filling and helps you carry out experiments with a sodium fluorescence tube (1000913).

It consists of a powder-coated sheet steel casing with two viewing windows. The front plate is attached via six knurled screws. The chamber is heated via a tubular heating element in the chamber floor. Temperature measurement and regulation is carried via an integrated microcontroller and a PT 100 thermocouple. A digital temperature display allows you to read off the temperature set-point and the actual temperature value. The “SET” button can be used to toggle the display between ° Celsius and ° Fahrenheit. The “+/-” keys allow you to set the set-point for the temperature in steps of 1 K. There is an opening at the top with a spring clip for holding a thermometer and a thermally insulated carrying handle.

The apparatus 1006794 is for operation with a mains voltage of 115 V (±10%), and the unit 1006795 is for operation with a mains voltage of 230 V (±10%).

2.1 Scope of delivery

1 Franck-Hertz tube with mercury filling mounted on front-plate
1 Heating chamber without front plate
1 Instruction sheet

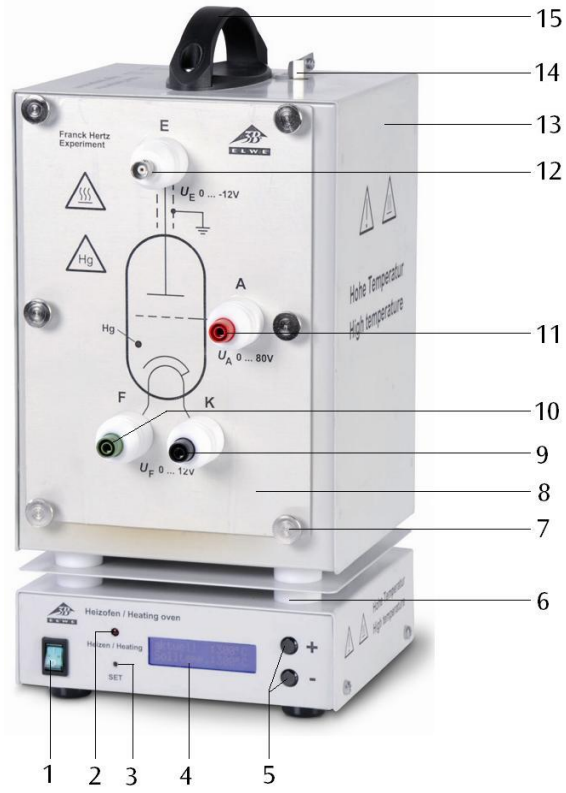

1 Power switch
2 Operating display
3 “SET” button
4 Display
5 “+/-” buttons
6 Thermal insulation
7 Knurled screws
8 Front plate with Franck-Hertz tube attached (not shown)
9 Cathode socket
10 Tube filament socket
11 Anode socket
12 BNC socket for signal output
13 Heating chamber
14 Spring clip for thermometer
15 Handle

3. Technical data

Franck-Hertz tube

Filament:	4 to 12 V AC/DC
Grid voltage:	0 to 70 V
Bias voltage:	1.5 V approx.
Operating temperature:	200° C approx.
Tube dimensions:	130 mm x 26 mm diam.
Weight:	380 g approx.

Heating chamber

Mains voltage:	See back of case

Dimensions of front opening:	230 x 160 mm² approx.
Heating power:	800 W @230 V
	400 W @115 V
Maximum temperature:	300°C @230 V
	250°C @115 V
Temperature constancy:	±1°C approx.
Dimensions:	335x180x165 mm³ approx.
Weight:	5.6 kg approx.

4. Operation

The following equipment is also required to complete the experiment:

1 Power supply unit for F/H experiment @230 V 1012819

or

1 Power supply unit for F/H experiment @115 V 1012818

1 Analogue oscilloscope, 2x 30 MHz 1002727

1 HF Patch cord, 1 m 1002746

2 HF Patch cords, BNC/4 mm plug 1002748

Safety leads for experiments 1002843

- Place front plate of the open side of the heating chamber and fix it in place with 6 knurled screws.
- Turn off the heating chamber and the control unit to begin with and turn all the knobs on the control fully to the left.
- Do not apply a voltage to the tube when it is still cold (the mercury inside may cause a short circuit).
- Connect terminals "A", "F" and "K" (refer to fig. 2).
- Connect terminal "E" of the Franck-Hertz tube to the correct input on the control unit by means of an BNC cable.
- Connect the “FH Signal U_Y-out” terminal of the control unit to the Y input of the oscilloscope and terminal “U_X” to the X input.
- Turn on the heating chamber. Set a temperature of about 210° C and wait for the tube to warm up (about 5 to 10 minutes).
- Turn on the control unit and the equipment should enter ramp mode.
- Set a filament voltage of 6 - 7 V. The indirectly heated cathode requires about 90 seconds to warm up, once the voltage is applied.
- Set the minimum acceleration voltage to zero, slowly increase the maximum acceleration voltage to 80 V.
- Do not, however, increase the accelerating voltage so much that self-discharge no longer occurs inside the tube. Any ionisation due to collisions will disrupt the curve.
- Set up the oscilloscope initially with settings of x = 1 V/div and y = 1 V/div.
- Observe the emergence of the maxima in the Franck-Hertz trace on the oscilloscope screen.
- Set up all the parameters, accelerating voltage, cathode filament, bias voltage and amplitude so that a trace with nicely delineated maxima and minima is obtained.

The procedure as described so far is a general setting procedure. Unavoidable differences resulting from the manufacture of individual Frank-Hertz tubes mean that the optimum parameters may differ from tube to tube. The test report included with the tube should give some idea of where good results may be obtained for the tube in question.

The collector current displays regularly recurring, equidistant maxima and minima that are independent of the accelerating voltage. The interval between these peaks is 4.9 V. A contact potential of 2 V exists between the anode and cathode of the tube, which is why the first maximum only appears in the region of 7 V. The first maxima will be more obvious when the temperature of the heating chamber is lower.

Evaluation of the Franck-Hertz curve:

To fully evaluate the Franck-Hertz curve, a digital voltmeter is needed. This does not require that the current of the electron beam be determined precisely. The oscilloscope screen should show the trace of a Franck-Hertz curve featuring very clear maxima and minima.

- Connect a digital voltmeter between the signal output (U_X) and the ground socket (refer to fig. 3).
- Press the “Man/Ramp” button and the display will show “Man” to indicate manual mode.
- Turn the accelerating voltage knob all the way to the left (U_A = 0 V).

The display will show the accelerating voltages in steps of 0.5 V. In order to obtain better test results, a digital voltmeter can be connected between sockets "A" and "K" in order to obtain a more accurate measure of the accelerating voltage.

Note: The accelerating voltage is reduced by a factor of 10 at the signal output (U_X). The digital voltmeter, however, measures the full accelerating voltage between sockets “A” and “K”.

By gradually increasing the accelerating voltage at a constant rate, the precise position of the maxima and minima can be determined with the aid of the digital voltmeter.

5. Care and maintenance

- Before cleaning the equipment, disconnect it from its power supply.
- Use a soft, damp cloth to clean it.

6. Disposal

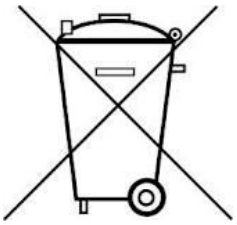

- The packaging should be disposed of at local recycling points.
- Should you need to dispose of the equipment itself, never throw it away in normal domestic waste. Local regulations for the disposal of electrical equipment will apply.
- If Frank-Hertz tubes are to be disposed of, local regulations applying to the disposal of mercury must be followed.

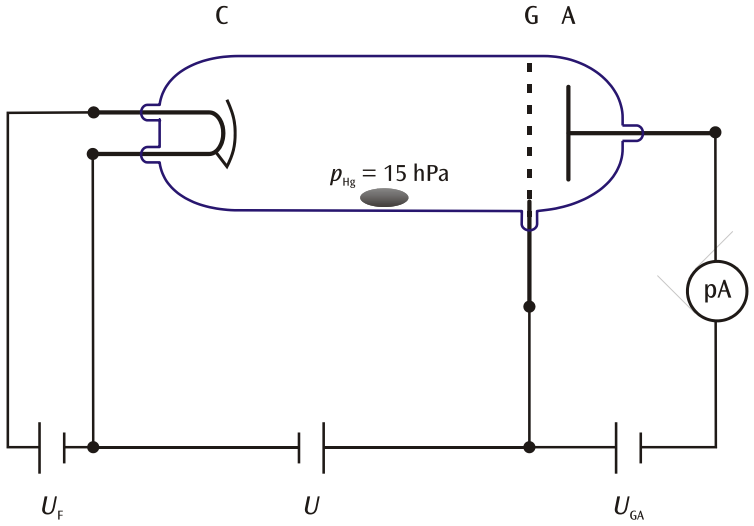

Fig. 1 Schematic of set up for measuring the Franck-Hertz curve for mercury (C cathode, G grid, A collector electrode)

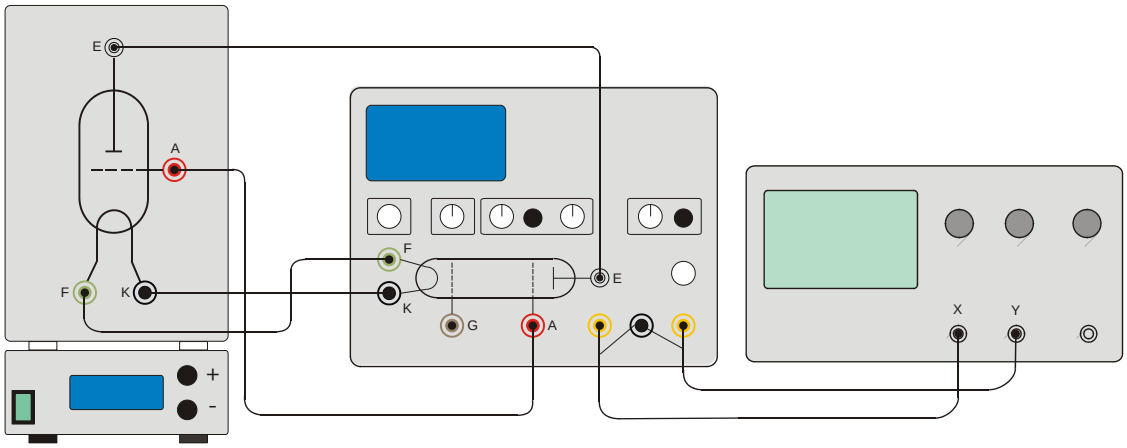

Fig. 2: Experiment set-up for Franck-Hertz tube with Hg filling

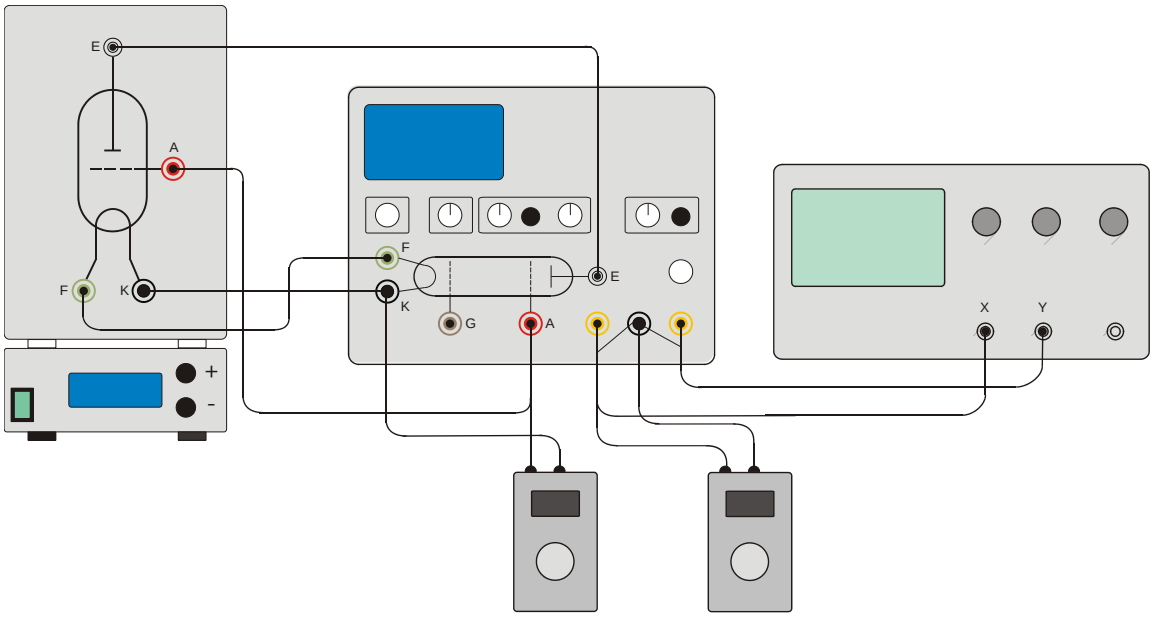

Fig. 3 Experiment set-up for Franck-Hertz tube with 2 digital voltmeters

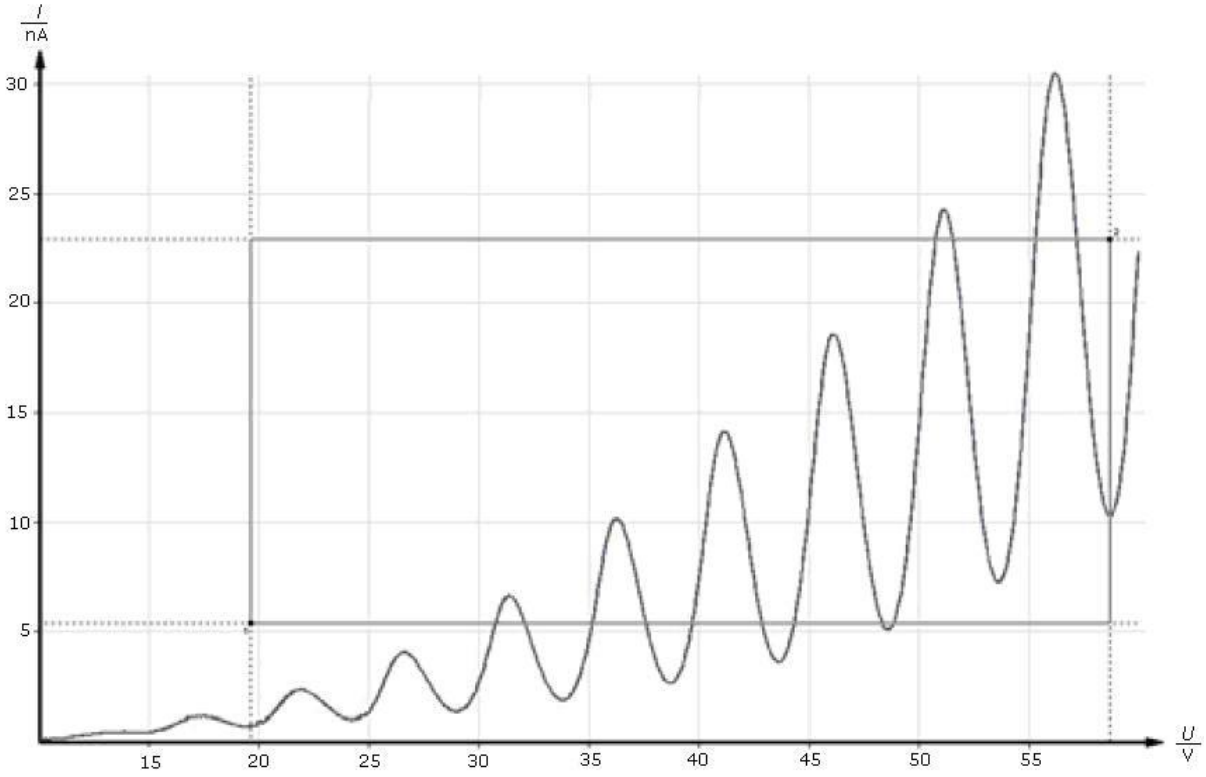

Fig. 4 Franck-Hertz curve

© Copyright 2015 3B Scientific GmbH